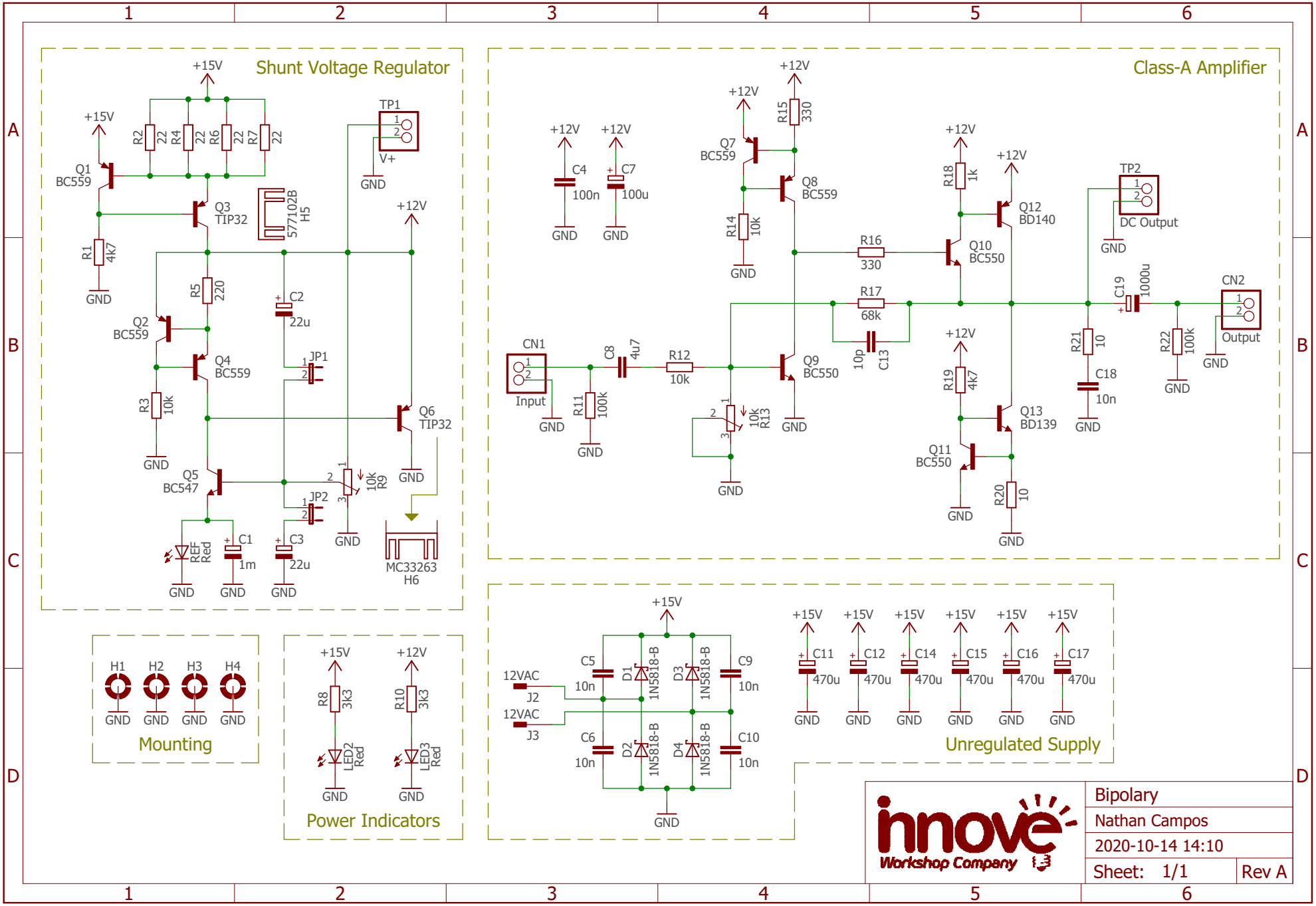
Shunt Voltage Regulator
+15V
R2 22
R4 22
R6 22
R7 22
Q1 BC559
Q3 TIP32
577102B H5
R1 4k7
R5 220
C2 22u
Q2 BC559
Q4 BC559
JP1
R3 10k
Q6 TIP32
Q5 BC547
JP2
10k R9
REF Red
C1 1m
C3 22u
MC33263 H6
TP1
V+
GND
+12V
Class-A Amplifier
C4 100n
C7 100u
Q7 BC559
R15 330
Q8 BC559
R14 10k
R16 330
R17 68k
10p C13
R18 1k
Q12 BD140
Q10 BC550
TP2
DC Output
C19 1000u
CN2
Output
CN1
Input
C8 4u7
R12 10k
R11 100k
Q9 BC550
10k R13
R19 4k7
Q13 BD139
Q11 BC550
R20 10
R21 10
C18 10n
R22 100k
Mounting
H1
H2
H3
H4
Power Indicators
R8 3k3
R10 3k3
LED2 Red
LED3 Red
12VAC
J2
J3
C5 10n
C6 10n
C9 10n
C10 10n
D1 1N5818-B
D2 1N5818-B
D3 1N5818-B
D4 1N5818-B
C11 470u
C12 470u
C14 470u
C15 470u
C16 470u
C17 470u
Unregulated Supply
Bipolary
Nathan Campos
2020-10-14 14:10
Sheet: 1/1
Rev A
innove Workshop Company